DORMER PRAMET™

PSC holders

Polygon Shank Coupling (PSC) holders for modular BS blades

Certainty
at every turn™

Polygon Shank Coupling (PSC) holders for modular BS blades

Expand your machining capabilities with cost-effective precision

Our Polygon Shank Coupling (PSC) holders deliver an economical solution for external radial turning applications, seamlessly integrating with our existing BS blade inventory.

Designed for right- or left-side assembly, these modular holders enhance versatility in parting-off and grooving operations without requiring new blade investments.

Related products

C.-BS-F EXT
C4 – C6

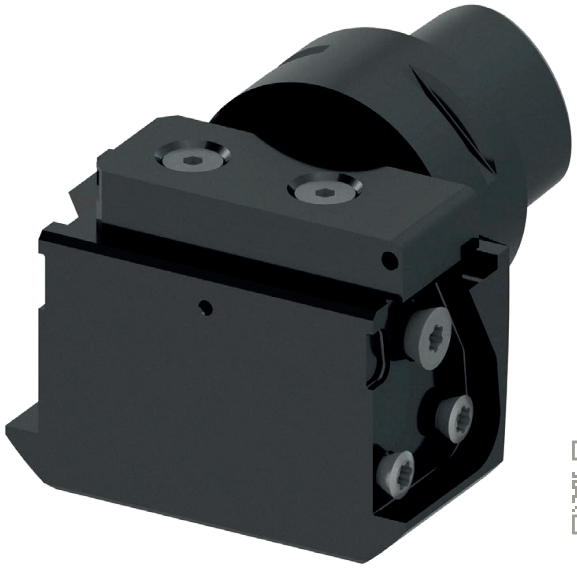

GLS BS

XLCF (NRL) BS

XLXFL BS AXIAL

GL. 2–6

LFMX 1.4 – 6.35

LFMX 3.1

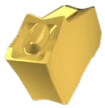

Features & benefits

Coolant block design.	**Directs coolant flow** precisely to the cutting edge and improves chip evacuation for better surface quality and fewer interruptions.
Optimized cooling.	**Extended durability and reduced wear** increases overall productivity.
Assembling of the blades on both left and right sides.	**Versatile tool holding solutions** supports a wide range of machining applications.
Modular design.	**Ability to reuse existing BS blades** lowers investment needs and optimizes resources.
Robust construction.	**Optimized stability and reliable performance** delivers consistent, high-quality results.

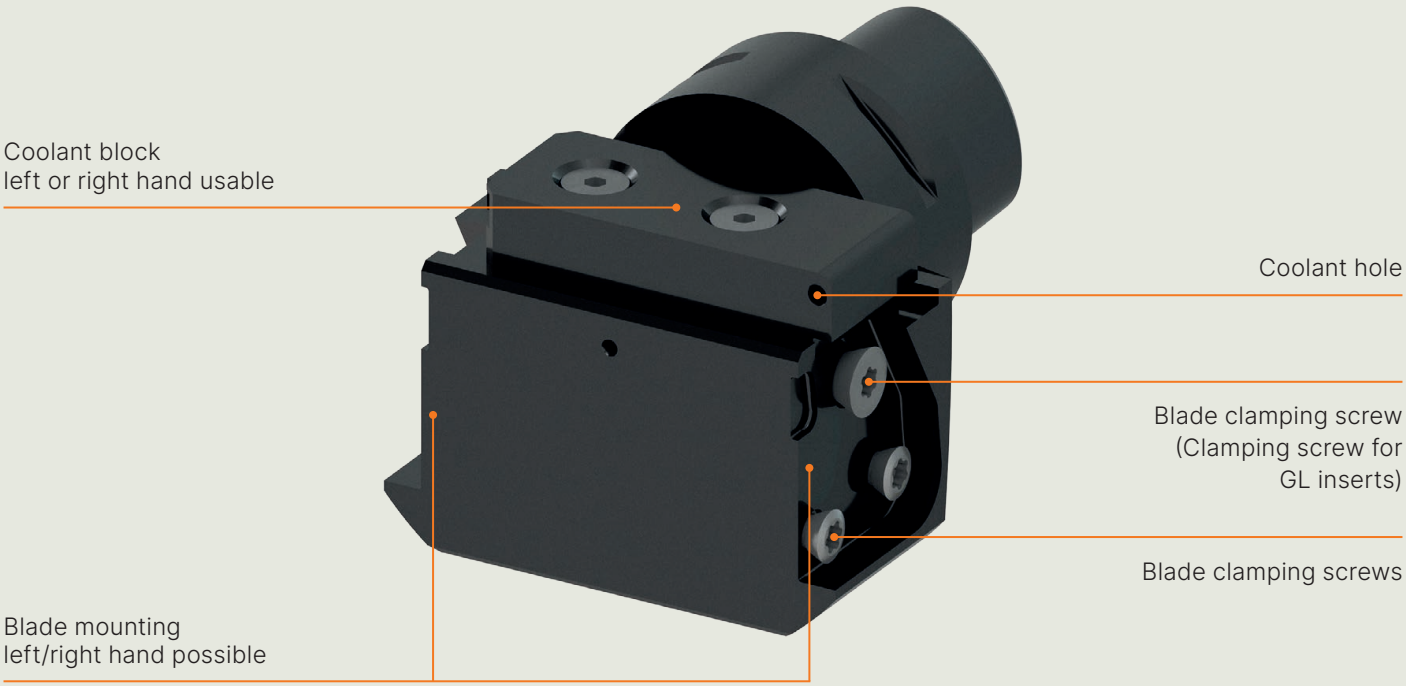

C.-BS-F EXT

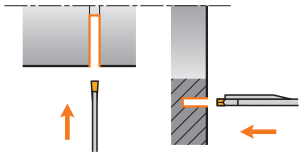

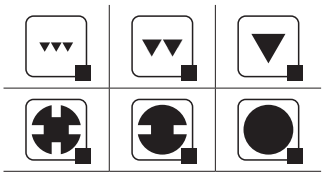

Modular tool holder for BS blades with Polygon Shank Coupling - External

Modular tool holder for BS type grooving and parting-off blades with adjustable coolant block. Tool shank according to ISO 26623 (Polygon Shank Coupling).

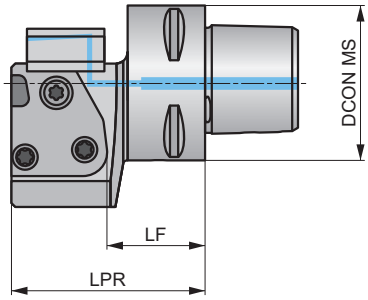

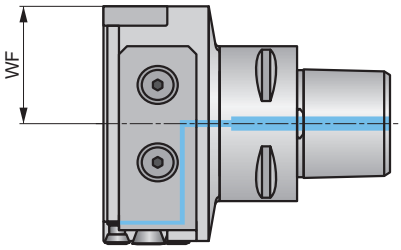

Product	LF (mm)	LPR (mm)	DCON MS (mm)	WF (mm)		kg			
C4-BS-SFN3050	25.3	50	40	30.3	✓	0.65	GI003	CO700	CC04
C5-BS-SFN3050	25.3	50	50	30.3	✓	0.83	GI003	CO700	CC04
C6-BS-SFN4260	35.3	60	63	42.3	✓	1.73	GI003	CO700	CC05

GI003	XLC.. 25..15...	XLC.. 25..25...	GL.BS	XLXFL 25...

CO700	US 45013-T20P	5.0	M5	US 46017-T20P	5.0	M6	FLAG T20P

CO700=2x US 45013-T20P

CC04	HCS 0416	4.0	M4	CHP-O5X1	CHP-BL2048	HXK 2.5
CC05	HCS 0416	4.0	M4	CHP-O5X1	CHP-BL2068	HXK 2.5

CC04=2xHCS 0416 + 2xCHP-O5x1, CC05=2xHCS 0416 + 2xCHP-O5x1

GLS BS

P M K N S H

DORMER PRAMET

G

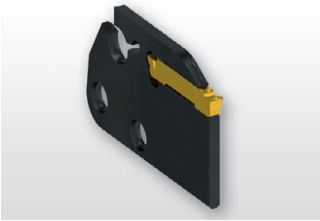

Grooving and Parting-off Blade for GL Inserts, for MS-EN Tool Holder

Blade for modular tool holder MS-EN, designed for GL inserts. Suited for grooving and parting-off applications. Blades treated for longer tool life.

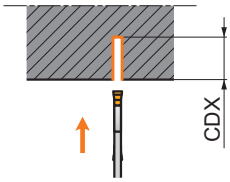

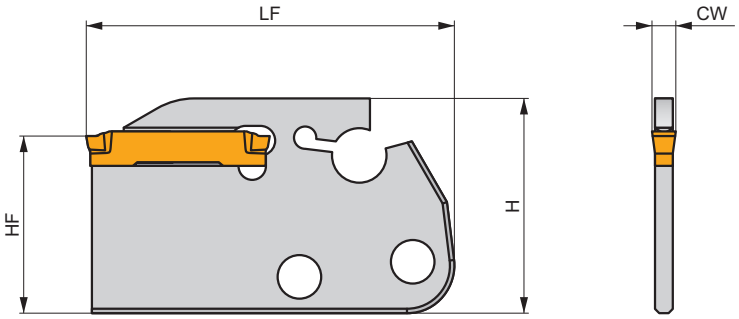

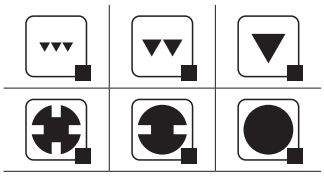

	Product	HF (mm)	H (mm)	LF (mm)	CW (mm)	CDX (mm)	kg	
	GL2-S29CBS	24	29	50	2.00	24	0.01	GI334
	GL3-S29CBS	24	29	50	3.00	24	0.02	GI335
	GL4-S29CBS	24	29	50	4.00	24	0.02	GI336
	GL5-S29CBS	24	29	50	5.00	24	0.03	GI337
	GL6-S29CBS	24	29	50	6.00	24	0.04	GI338

GI334	GL2..	–
GI335	GL3..	–
GI336	GL4..	–
GI337	GL5..	–
GI338	GL6-D600..	GL6-D800..

XLCF(NRL) BS

P M K N S H

DORMER PRAMET

X

Radial Grooving Blade for Modular MS-EN Tool Holder for LFMX Inserts

Modular grooving blade for grooving with single-sided LFMX inserts. Suited for grooving or parting-off (max. 25 mm cutting depth) applications. Blades treated for longer tool life.

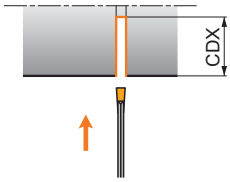

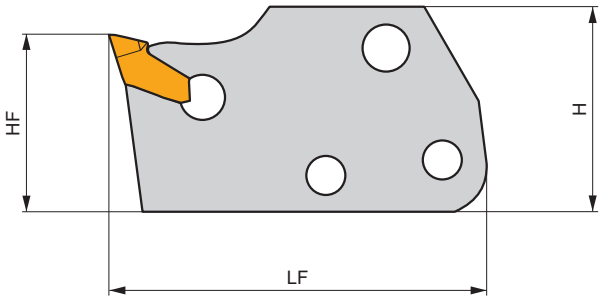

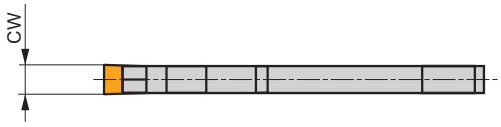

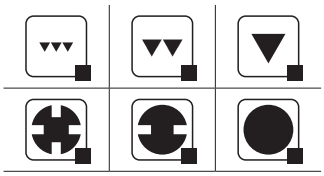

	Product	HF (mm)	H (mm)	LF (mm)	CW (mm)	CDX (mm)	kg		
R	XLCFR 250115-1.60	24	29	40	1.50	15	0.01	GI132	KV
	XLCFR 250115-2.00	24	29	40	2.00	15	0.05	GI061	KV
L	XLCFL 250115-1.60	24	29	40	1.50	15	0.04	GI132	KV
	XLCFL 250115-2.00	24	29	40	2.00	15	0.05	GI061	KV
N	XLCFN 250215-3.00	24	29	40	3.10	15	0.04	GI001	KV
	XLCFN 250225-3.00	24	29	50	3.10	25	0.02	GI001	KV
	XLCFN 250315-4.00	24	29	40	4.10	15	0.04	GI002	KV
	XLCFN 250325-4.00	24	29	50	4.10	25	0.04	GI002	KV
	XLCFN 250425-5.00	24	29	50	5.10	25	0.04	GI004	KV
	XLCFN 250525-6.35	24	29	50	6.35	25	0.07	GI005	KV

GI001	LFMX 3.1-.	–	–
GI002	LFMX 4.1-.	–	–
GI004	LFMX 5.1-.	–	–
GI005	LFMX 6.35-.	–	–
GI061	LFMX 2.0-.	LFMX 2.2-.	–
GI132	LFMX 1.4-.	LFMX 1.5-.	LFMX 1.6-.

KV	KV 5x70

XLXFL BS AXIAL

P M K N S H

DORMER PRAMET

X

Axial Grooving Blade for Modular MS-EN Tool Holder for LFMX Inserts

Modular grooving blade for grooving with single-sided LFMX inserts. Suited for axial grooving (max. 20 mm cutting depth) applications. Can be fitted to MS-EN tool holder. Blades treated for longer tool life.

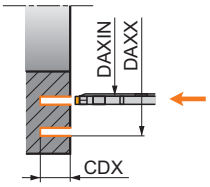

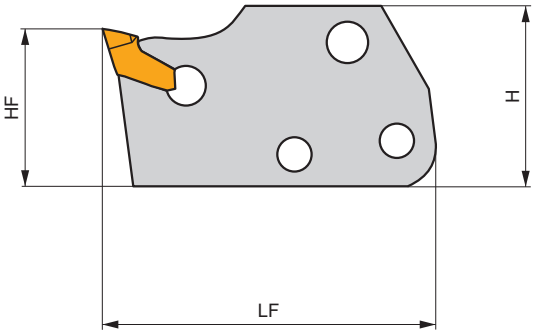

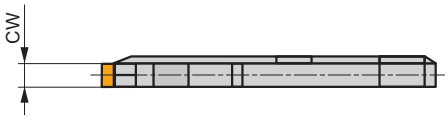

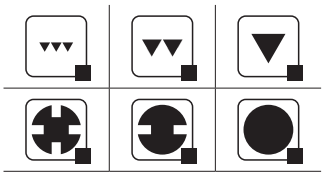

	Product	H (mm)	HF (mm)	LF (mm)	CW (mm)	CDX (mm)	DAXIN (mm)	DAXX (mm)	kg		
L	XLXFL 250220-3.00-60	29	24	46	3.10	20	60	85	0.05	GI001	KV
	XLXFL 250220-3.00-80	29	24	46	3.10	20	80	105	0.05	GI001	KV
	XLXFL 250220-3.00-100	29	24	46	3.10	20	100	155	0.03	GI001	KV
	XLXFL 250220-3.00-150	29	24	46	3.10	20	150	280	0.03	GI001	KV

GI001	LFMX 3.1-.

KV	KV 5x70

ISO group		WMG (Work Material Group)				Hardness (HB or HRC)	Ultimate Tensile Strength (MPa)
P	P1	P1.1	Free machining steel (carbon steels with increased machinability)		Sulfurized	< 240 HB	≤ 830
		P1.2			Sulfurized and phosphorized	< 180 HB	≤ 620
		P1.3			Sulfurized/phosphorized and leaded	< 180 HB	≤ 620
	P2	P2.1	Plain carbon steel (steels comprised of mainly iron and carbon)		Containing <0.25 % C	< 180 HB	≤ 620
		P2.2			Containing <0.55 % C	< 240 HB	≤ 830
		P2.3			Containing >0.55 % C	< 300 HB	≤ 1030
	P3	P3.1	Alloy steel (carbon steels with an alloying content ≤ 10%)		Annealed	< 180 HB	≤ 620
		P3.2			Hardened and tempered	180 – 260 HB	> 620 ≤ 900
		P3.3				260 – 360 HB	> 900 ≤ 1240
	P4	P4.1	Tool steel (special alloy steel for tools, dies and molds)		Annealed	< 26 HRC	≤ 900
		P4.2			Hardened and tempered	26 – 39 HRC	> 900 ≤ 1240
		P4.3				39 – 45 HRC	> 1240 ≤ 1450
M	M1	M1.1	Ferritic stainless steel (straight chromium non-hardenable alloys)			< 160 HB	≤ 520
		M1.2				160 – 220 HB	> 520 ≤ 700
	M2	M2.1	Martensitic stainless steel (straight chromium hardenable alloys)		Annealed	< 200 HB	≤ 670
		M2.2			Quenched and tempered	200 – 280 HB	> 670 ≤ 950
		M2.3			Precipitation-hardened	280 – 380 HB	> 950 ≤ 1300
	M3	M3.1	Austenitic stainless steel (chromium-nickel and chromium-nickel-manganese alloys)			< 200 HB	≤ 750
		M3.2				200 – 260 HB	> 750 ≤ 870
		M3.3				260 – 300 HB	> 870 ≤ 1040
	M4	M4.1	Austenitic-ferritic (DUPLEX) or super-austenitic stainless steel			< 300 HB	≤ 990
		M4.2	Precipitation hardening austenitic stainless steel			300 – 380 HB	≤ 1320
K	K1	K1.1	Gray iron or Automotive Gray iron (GG) (iron-carbon castings with a lamellar graphite microstructure)		Ferritic or ferritic-pearlitic	< 180 HB	≤ 190
		K1.2			Ferritic-pearlictic or pearlitic	180 – 240 HB	> 190 ≤ 310
		K1.3			Pearlitic	240 – 280 HB	> 310 ≤ 390
	K2	K2.1	Malleable iron (GTS/GTW) (iron-carbon castings with a graphite-free microstructure)		Ferritic	< 160 HB	≤ 400
		K2.2			Ferritic or pearlitic	160 – 200 HB	> 400 ≤ 550
		K2.3			Pearlitic	200 – 240 HB	> 550 ≤ 660
	K3	K3.1	Ductile iron (GGG) (iron-carbon castings with a nodular graphite microstructure)		Ferritic	< 180 HB	≤ 560
		K3.2			Ferritic or pearlitic	180 – 220 HB	> 560 ≤ 680
		K3.3			Pearlitic	220 – 260 HB	> 680 ≤ 800
	K4	K4.1	Austenitic gray iron (ASTM A436) (iron-carbon alloy castings with an austenitic lamellar graphite microstructure)			< 180 HB	≤ 190
		K4.2	Austenitic ductile iron (ASTM A439 or ASTM A571) (iron-carbon alloy castings with an austenitic nodular graphite microstructure)			< 240 HB	≤ 740
		K4.3	Austempered ductile iron (ASTM A897) (iron-carbon alloy castings with an ausferrite microstructure)			< 280 HB	> 840 ≤ 980
		K4.4				280 – 320 HB	> 980 ≤ 1130
		K4.5				320 – 360 HB	> 1130 ≤ 1280
	K5	K5.1	Compacted graphite iron CGI (ASTM A842) (iron-carbon castings with a vermicular graphite structure)		Ferritic	< 180 HB	≤ 400
		K5.2			Ferritic-pearlitic	180 – 220 HB	> 400 ≤ 450
		K5.3			Pearlitic	220 – 260 HB	> 450 ≤ 500
N	N1	N1.1	Commercially pure wrought aluminium			< 60 HB	≤ 240
		N1.2	Wrought aluminium alloys		Half hard tempered	60 – 100 HB	> 240 ≤ 400
		N1.3			Full hard tempered	100 – 150 HB	> 400 ≤ 590
	N2	N2.1	Cast aluminium alloys			< 75 HB	≤ 240
		N2.2				75 – 90 HB	> 240 ≤ 270
		N2.3				90 – 140 HB	> 270 ≤ 440
	N3	N3.1	Free-cutting copper-alloys materials with excellent machining properties			–	–
		N3.2	Short-chip copper-alloys with good to moderate machining properties			–	–
		N3.3	Electrolytic copper and long-chip copper-alloys with moderate to poor machining properties			–	–
	N4	N4.1	Thermoplastic polymers			–	–
		N4.2	Thermosetting polymers			–	–
		N4.3	Reinforced polymers or composites			–	–
	N5	N5.1	Graphite			–	–
S	S1	S1.1	Titanium or titanium alloys			< 200 HB	≤ 660
		S1.2				200 – 280 HB	> 660 ≤ 950
		S1.3				280 – 360 HB	> 950 ≤ 1200
	S2	S2.1	Fe-based high-temperature alloys			< 200 HB	≤ 690
		S2.2				200 – 280 HB	> 690 ≤ 970
	S3	S3.1	Ni-based high-temperature alloys			< 280 HB	≤ 940
		S3.2				280 – 360 HB	> 940 ≤ 1200
	S4	S4.1	Co-based high-temperature alloys			< 240 HB	≤ 800
		S4.2				240 – 320 HB	> 800 ≤ 1070
H	H1	H1.1	Chilled cast iron			< 440 HB	–
	H2	H2.1	Hardened cast iron			< 55 HRC	–
		H2.2				> 55 HRC	–
	H3	H3.1	Hardened steel < 55 HRC			< 51 HRC	–
		H3.2				51 – 55 HRC	–
	H4	H4.1	Hardened steel > 55 HRC			55 – 59 HRC	–
		H4.2				> 59 HRC	–

Notes

DORMER PRAMET™

Certainty at every turn

Together we will keep our world turning, now and into the future. We want to help our community feel confident they can get the job done with simplified access to the right advice, tools and training whenever and wherever they need it. Delivering certainty to help our customers achieve their goals today – and be ready for tomorrow.

Need some help?
Contact sales support.

Download our apps

Library app

Calculator app

Certainty at every turn™