DORMER PRAMET™

Force Micro

Solid carbide multi-material micro drills

Certainty
at every turn™

Solid carbide multi-material micro drills

Enhanced process reliability in small-diameter applications

The new Force Micro drills deliver exceptional performance for micro applications with diameters ranging from 0.7 to 2.95 mm.

Engineered for utmost accuracy and long tool life, they operate smoothly at speeds above 15 000 RPM, featuring a 140°-point angle, advanced coating, and optimized flute design for reliable chip evacuation across multiple materials.

Related products

RC305

5xD

0.7 – 2.95 mm

AlCrN Coated, **Coolant feed**

Features and benefits

Micro diameters from 0.7 to 2.95 mm with through-coolant capabilities.	**Exceptional precision** in micro applications with superior tool performance.
140°-point angle and fine cutting edges.	**Excellent hole quality** and smooth surface finish.
Internal coolant and optimized flute geometry.	**High process reliability** for effective chip evacuation and consistent results.
Advanced AlCrN coating.	**Extended tool life** with excellent wear resistance and thermal stability.
Suitable for angular exits up to 20°.	**Versatile drills** for complex drilling applications.

Boost productivity with significantly longer tool life in ISO-P and ISO-M drilling.

Extensive testing against multiple competitors has demonstrated superior durability.

Features and benefits

Ultrafine carbide substrate

- Assist curling the chips
- Prevents the chips from breaking the wall

Web design

- Strong web design
- Optimized flute space

Coolant through

- Ensure cooling at the cutting zone
- Enhance chip evacuation

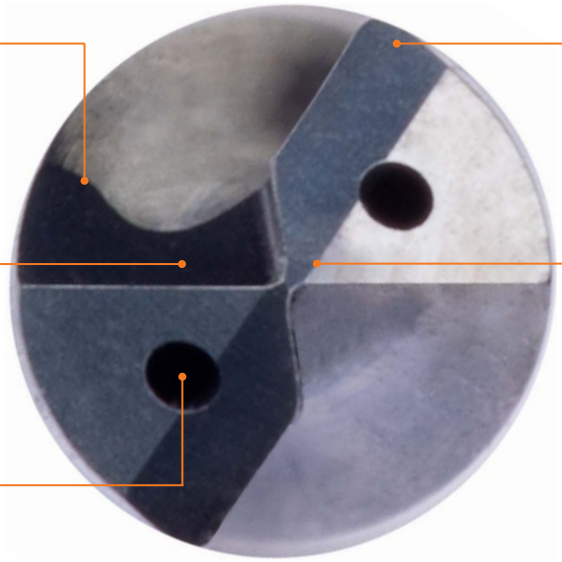

Outer corner design

- Increases stability
- Improve hole quality

4-facet split point

- Good positional accuracy and tolerance
- Stronger edges
- Improved chip-formation
- Better force distribution

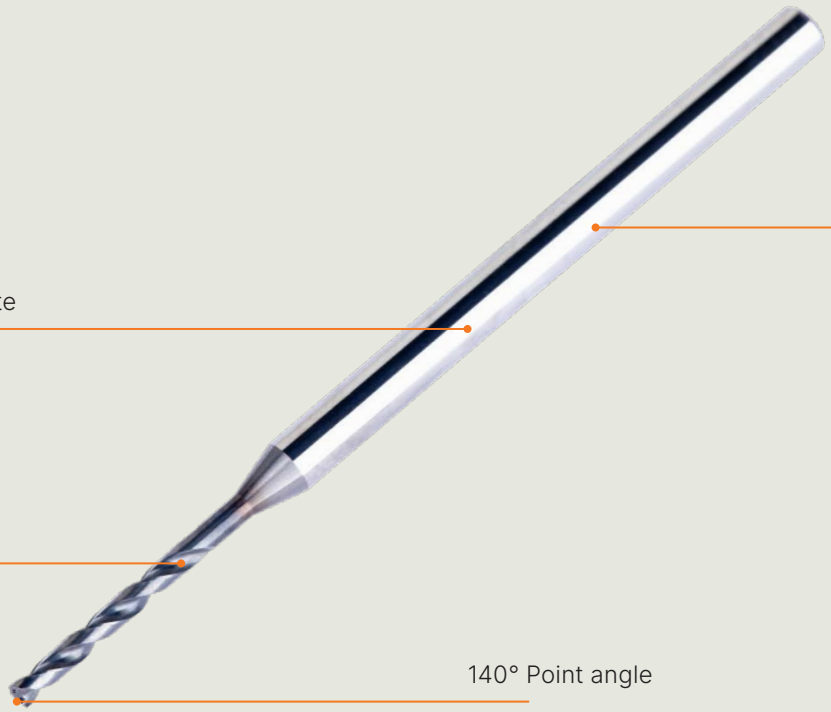

RC305

DORMER PRAMET

FORCE Micro Solid Carbide 5XD Drill with Coolant Feed, AlCrN Coated

High-performance micro drill designed for precision applications, featuring a 140° point angle and capable of drilling up to 5xD. Engineered with finely prepared cutting edges to ensure excellent surface quality. Internal coolant enhances chip evacuation, while the advanced AlCrN coating provides outstanding wear resistance, thermal stability, and process reliability.

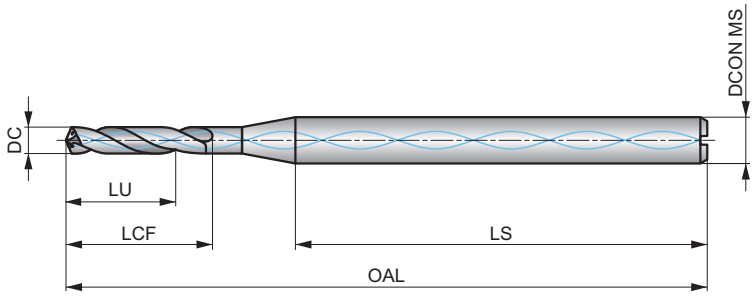

HM	DIN 6535	5×D
140°	AlCrN	DIN 6535HA
R	DC m7	

Workpiece material group suitability, starting values for cutting speed (m/min) and feed Alpha Code. Tables with feed per revolution can be found starting from page 8.

P1.1	P1.2	P1.3	P2.1	P2.2	P2.3	P3.1	P3.2	P3.3	P4.1	P4.2	P4.3	M1.1	M1.2
■ 100 J	■ 105 J	■ 108 J	■ 102 J	■ 82 J	■ 80 J	■ 80 J	■ 63 H	■ 40 E	■ 70 G	■ 63 H	■ 40 E	■ 65 J	■ 63 J
M2.1	M2.2	M2.3	M3.1	M3.2	M3.3	M4.1	M4.2	K1.1	K1.2	K1.3	K2.1	K2.2	K2.3
■ 60 G	■ 63 G	■ 63 G	■ 40 F	■ 37 F	■ 35 F	■ 25 E	■ 25 E	■ 105 L	■ 100 L	■ 95 L	■ 105 J	■ 65 J	■ 63 J
K3.1	K3.2	K3.3	K4.1	K4.2	K4.3	K4.4	K4.5	K5.1	K5.2	K5.3	N1.1	N1.2	N1.3
■ 65 J	■ 63 J	■ 60 J	■ 80 J	■ 75 J	■ 60 U	■ 58 U	■ 55 U	■ 80 J	■ 70 J	■ 65 J	■ 125 Y	■ 120 Y	■ 119 Y
N2.1	N2.2	N2.3	N3.1	N3.2	N3.3	S1.1	S1.2	S1.3	S2.1	S2.2	S3.1	S3.2	S4.1
■ 125 Y	■ 120 L	■ 119 L	■ 80 G	■ 75 J	■ 74 E	◪ 40 E	◪ 25 C	◪ 25 C	◪ 32 E	◪ 20 C	◪ 25 D	◪ 16 D	◪ 25 D
S4.2													
◪ 16 D													

DCON MS tolerance h6.

Product	DC (inch)	DC (mm)	DC (inch)	LCF (mm)	OAL (mm)	LU (mm)	LS (mm)	DCON MS (mm)
RC3050.7	–	0.70	0.0280	6.0	48.0	30.0	3.00	3.00
RC3050.75	–	0.75	0.0300	7.0	48.0	30.0	3.00	3.00
RC3051/32	1/32	0.79	0.0310	7.0	48.0	30.0	3.00	3.00
RC3050.8	–	0.80	0.0310	7.0	48.0	30.0	3.00	3.00
RC3050.85	–	0.85	0.0330	8.0	50.0	30.0	3.00	3.00
RC3050.9	–	0.90	0.0350	8.0	50.0	30.0	3.00	3.00
RC3050.95	–	0.95	0.0370	9.0	50.0	30.0	3.00	3.00
RC3051.0	–	1.00	0.0390	9.0	50.0	30.0	3.00	3.00
RC3051.05	–	1.05	0.0410	9.0	51.0	30.0	3.00	3.00
RC3051.1	–	1.10	0.0430	9.0	51.0	30.0	3.00	3.00
RC3051.15	–	1.15	0.0450	10.0	51.0	30.0	3.00	3.00
RC3053/64	3/64	1.19	0.0470	10.0	51.0	30.0	3.00	3.00
RC3051.2	–	1.20	0.0470	10.0	51.0	30.0	3.00	3.00
RC3051.25	–	1.25	0.0490	11.0	51.0	30.0	3.00	3.00
RC3051.3	–	1.30	0.0510	11.0	53.0	30.0	3.00	3.00
RC3051.35	–	1.35	0.0530	12.0	53.0	30.0	3.00	3.00
RC3051.4	–	1.40	0.0550	12.0	53.0	30.0	3.00	3.00
RC3051.45	–	1.45	0.0570	13.0	53.0	30.0	3.00	3.00
RC3051.5	–	1.50	0.0590	13.0	53.0	30.0	3.00	3.00
RC3051.55	–	1.55	0.0610	14.0	54.0	30.0	3.00	3.00
RC3051/16	1/16	1.59	0.0630	14.0	54.0	30.0	3.00	3.00
RC3051.6	–	1.60	0.0630	14.0	54.0	30.0	3.00	3.00
RC3051.65	–	1.65	0.0650	14.0	54.0	30.0	3.00	3.00

Product	DC (inch)	DC (mm)	DC (inch)	LCF (mm)	OAL (mm)	LU (mm)	LS (mm)	DCON MS (mm)
RC3051.7	–	1.70	0.0670	14.0	54.0	30.0	3.00	3.00
RC3051.75	–	1.75	0.0690	15.0	54.0	30.0	3.00	3.00
RC3051.8	–	1.80	0.0710	15.0	54.0	30.0	3.00	3.00
RC3051.85	–	1.85	0.0730	16.0	57.0	30.0	3.00	3.00
RC3051.9	–	1.90	0.0750	16.0	57.0	30.0	3.00	3.00
RC3051.95	–	1.95	0.0770	17.0	57.0	30.0	3.00	3.00
RC3055/64	5/64	1.98	0.0780	17.0	57.0	30.0	3.00	3.00
RC3052.0	–	2.00	0.0790	17.0	57.0	30.0	3.00	3.00
RC3052.05	–	2.05	0.0810	18.0	57.0	30.0	3.00	3.00
RC3052.1	–	2.10	0.0830	18.0	57.0	30.0	3.00	3.00
RC3052.15	–	2.15	0.0850	19.0	57.0	30.0	3.00	3.00
RC3052.2	–	2.20	0.0870	19.0	57.0	30.0	3.00	3.00
RC3052.25	–	2.25	0.0890	20.0	59.0	30.0	3.00	3.00
RC3052.3	–	2.30	0.0910	20.0	59.0	30.0	3.00	3.00
RC3052.35	–	2.35	0.0930	20.0	59.0	30.0	3.00	3.00
RC3053/32	3/32	2.38	0.0940	20.0	59.0	30.0	3.00	3.00
RC3052.4	–	2.40	0.0940	20.0	59.0	30.0	3.00	3.00
RC3052.45	–	2.45	0.0960	21.0	59.0	30.0	3.00	3.00
RC3052.5	–	2.50	0.0980	21.0	59.0	30.0	3.00	3.00
RC3052.55	–	2.55	0.1000	22.0	62.0	30.0	3.00	3.00
RC3052.6	–	2.60	0.1020	22.0	62.0	30.0	3.00	3.00
RC3052.65	–	2.65	0.1040	23.0	62.0	30.0	3.00	3.00
RC3052.7	–	2.70	0.1060	23.0	62.0	30.0	3.00	3.00
RC3052.75	–	2.75	0.1080	24.0	62.0	30.0	3.00	3.00
RC3057/64	7/64	2.78	0.1090	24.0	62.0	30.0	3.00	3.00
RC3052.8	–	2.80	0.1100	24.0	62.0	30.0	3.00	3.00
RC3052.85	–	2.85	0.1120	25.0	62.0	30.0	3.00	3.00
RC3052.9	–	2.90	0.1140	25.0	62.0	30.0	3.00	3.00
RC3052.95	–	2.95	0.1160	25.0	62.0	30.0	3.00	3.00

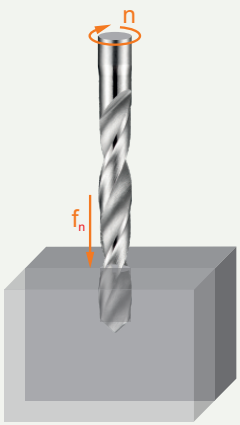

Feed per revolution f_n (mm/rev)
Depending on the working conditions it might be necessary to adjust these values ± 25 %.

How to use this table to find the feed per revolution f_n:

1. Find your Alpha Code on the product page (example: 46J, "**J**" is the Alpha Code).
2. Find the closest diameter for your cutting application in the top row of the table.
3. Find your Alpha Code in the left column of the table.
4. The intersection (cell) of the Diameter and Alpha Code is the feed per revolution f_n.

Feed rates (mm/rev)	ø DC (mm)											
	0.70	0.80	0.90	1.00	1.10	1.20	1.30	1.40	1.50	1.60	1.70	1.80
C	0.011	0.012	0.014	0.015	0.017	0.018	0.020	0.022	0.024	0.025	0.027	0.029
D	0.011	0.013	0.014	0.016	0.018	0.020	0.023	0.025	0.027	0.029	0.031	0.034
E	0.012	0.014	0.015	0.017	0.020	0.022	0.025	0.027	0.030	0.033	0.035	0.038
F	0.013	0.014	0.016	0.018	0.021	0.024	0.028	0.031	0.034	0.037	0.040	0.044
G	0.013	0.015	0.017	0.019	0.023	0.026	0.030	0.034	0.038	0.041	0.045	0.049
H	0.014	0.016	0.018	0.020	0.025	0.029	0.034	0.038	0.043	0.048	0.052	0.057
J	0.017	0.019	0.022	0.024	0.030	0.036	0.042	0.048	0.054	0.060	0.066	0.072
L	0.020	0.022	0.025	0.028	0.035	0.043	0.050	0.057	0.065	0.072	0.079	0.086
U	0.018	0.021	0.023	0.026	0.028	0.030	0.033	0.035	0.037	0.039	0.041	0.044
Y	0.048	0.054	0.061	0.068	0.074	0.079	0.085	0.090	0.096	0.102	0.107	0.113
	ø DC (mm)											
	1.90	2.00	2.10	2.20	2.30	2.40	2.50	2.60	2.70	2.80	2.90	2.95
C	0.030	0.032	0.033	0.034	0.036	0.037	0.038	0.039	0.040	0.042	0.043	0.043
D	0.036	0.038	0.040	0.041	0.042	0.044	0.045	0.047	0.048	0.050	0.051	0.052
E	0.040	0.043	0.045	0.047	0.049	0.051	0.053	0.054	0.056	0.058	0.060	0.061
F	0.047	0.050	0.052	0.055	0.057	0.059	0.062	0.064	0.066	0.068	0.071	0.072
G	0.052	0.056	0.059	0.062	0.064	0.067	0.070	0.073	0.076	0.078	0.081	0.083
H	0.061	0.066	0.070	0.073	0.077	0.080	0.084	0.088	0.091	0.095	0.098	0.100
J	0.078	0.084	0.089	0.094	0.099	0.104	0.110	0.115	0.120	0.125	0.130	0.132
L	0.094	0.101	0.107	0.114	0.120	0.127	0.133	0.139	0.146	0.152	0.159	0.162
U	0.046	0.048	0.050	0.052	0.055	0.057	0.059	0.061	0.063	0.066	0.068	0.069
Y	0.118	0.124	0.130	0.135	0.141	0.146	0.152	0.158	0.163	0.169	0.174	0.177

ISO group		WMG (Work Material Group)				Hardness (HB or HRC)	Ultimate Tensile Strength (MPa)
P	P1	P1.1	Free machining steel (carbon steels with increased machinability)		Sulfurized	< 240 HB	≤ 830
		P1.2			Sulfurized and phosphorized	< 180 HB	≤ 620
		P1.3			Sulfurized/phosphorized and leaded	< 180 HB	≤ 620
	P2	P2.1	Plain carbon steel (steels comprised of mainly iron and carbon)		Containing <0.25 % C	< 180 HB	≤ 620
		P2.2			Containing <0.55 % C	< 240 HB	≤ 830
		P2.3			Containing >0.55 % C	< 300 HB	≤ 1030
	P3	P3.1	Alloy steel (carbon steels with an alloying content ≤ 10%)		Annealed	< 180 HB	≤ 620
		P3.2			Hardened and tempered	180 – 260 HB	> 620 ≤ 900
		P3.3				260 – 360 HB	> 900 ≤ 1240
	P4	P4.1	Tool steel (special alloy steel for tools, dies and molds)		Annealed	< 26 HRC	≤ 900
		P4.2			Hardened and tempered	26 – 39 HRC	> 900 ≤ 1240
		P4.3				39 – 45 HRC	> 1240 ≤ 1450
M	M1	M1.1	Ferritic stainless steel (straight chromium non-hardenable alloys)			< 160 HB	≤ 520
		M1.2				160 – 220 HB	> 520 ≤ 700
	M2	M2.1	Martensitic stainless steel (straight chromium hardenable alloys)		Annealed	< 200 HB	≤ 670
		M2.2			Quenched and tempered	200 – 280 HB	> 670 ≤ 950
		M2.3			Precipitation-hardened	280 – 380 HB	> 950 ≤ 1300
	M3	M3.1	Austenitic stainless steel (chromium-nickel and chromium-nickel-manganese alloys)			< 200 HB	≤ 750
		M3.2				200 – 260 HB	> 750 ≤ 870
		M3.3				260 – 300 HB	> 870 ≤ 1040
	M4	M4.1	Austenitic-ferritic (DUPLEX) or super-austenitic stainless steel			< 300 HB	≤ 990
		M4.2	Precipitation hardening austenitic stainless steel			300 – 380 HB	≤ 1320
K	K1	K1.1	Gray iron or Automotive Gray iron (GG) (iron-carbon castings with a lamellar graphite microstructure)		Ferritic or ferritic-pearlitic	< 180 HB	≤ 190
		K1.2			Ferritic-pearlictic or pearlitic	180 – 240 HB	> 190 ≤ 310
		K1.3			Pearlitic	240 – 280 HB	> 310 ≤ 390
	K2	K2.1	Malleable iron (GTS/GTW) (iron-carbon castings with a graphite-free microstructure)		Ferritic	< 160 HB	≤ 400
		K2.2			Ferritic or pearlitic	160 – 200 HB	> 400 ≤ 550
		K2.3			Pearlitic	200 – 240 HB	> 550 ≤ 660
	K3	K3.1	Ductile iron (GGG) (iron-carbon castings with a nodular graphite microstructure)		Ferritic	< 180 HB	≤ 560
		K3.2			Ferritic or pearlitic	180 – 220 HB	> 560 ≤ 680
		K3.3			Pearlitic	220 – 260 HB	> 680 ≤ 800
	K4	K4.1	Austenitic gray iron (ASTM A436) (iron-carbon alloy castings with an austenitic lamellar graphite microstructure)			< 180 HB	≤ 190
		K4.2	Austenitic ductile iron (ASTM A439 or ASTM A571) (iron-carbon alloy castings with an austenitic nodular graphite microstructure)			< 240 HB	≤ 740
		K4.3	Austempered ductile iron (ASTM A897) (iron-carbon alloy castings with an ausferrite microstructure)			< 280 HB	> 840 ≤ 980
		K4.4				280 – 320 HB	> 980 ≤ 1130
		K4.5				320 – 360 HB	> 1130 ≤ 1280
	K5	K5.1	Compacted graphite iron CGI (ASTM A842) (iron-carbon castings with a vermicular graphite structure)		Ferritic	< 180 HB	≤ 400
		K5.2			Ferritic-pearlitic	180 – 220 HB	> 400 ≤ 450
		K5.3			Pearlitic	220 – 260 HB	> 450 ≤ 500
N	N1	N1.1	Commercially pure wrought aluminium			< 60 HB	≤ 240
		N1.2	Wrought aluminium alloys		Half hard tempered	60 – 100 HB	> 240 ≤ 400
		N1.3			Full hard tempered	100 – 150 HB	> 400 ≤ 590
	N2	N2.1	Cast aluminium alloys			< 75 HB	≤ 240
		N2.2				75 – 90 HB	> 240 ≤ 270
		N2.3				90 – 140 HB	> 270 ≤ 440
	N3	N3.1	Free-cutting copper-alloys materials with excellent machining properties			–	–
		N3.2	Short-chip copper-alloys with good to moderate machining properties			–	–
		N3.3	Electrolytic copper and long-chip copper-alloys with moderate to poor machining properties			–	–
	N4	N4.1	Thermoplastic polymers			–	–
		N4.2	Thermosetting polymers			–	–
		N4.3	Reinforced polymers or composites			–	–
	N5	N5.1	Graphite			–	–
S	S1	S1.1	Titanium or titanium alloys			< 200 HB	≤ 660
		S1.2				200 – 280 HB	> 660 ≤ 950
		S1.3				280 – 360 HB	> 950 ≤ 1200
	S2	S2.1	Fe-based high-temperature alloys			< 200 HB	≤ 690
		S2.2				200 – 280 HB	> 690 ≤ 970
	S3	S3.1	Ni-based high-temperature alloys			< 280 HB	≤ 940
		S3.2				280 – 360 HB	> 940 ≤ 1200
	S4	S4.1	Co-based high-temperature alloys			< 240 HB	≤ 800
		S4.2				240 – 320 HB	> 800 ≤ 1070
H	H1	H1.1	Chilled cast iron			< 440 HB	–
	H2	H2.1	Hardened cast iron			< 55 HRC	–
		H2.2				> 55 HRC	–
	H3	H3.1	Hardened steel < 55 HRC			< 51 HRC	–
		H3.2				51 – 55 HRC	–
	H4	H4.1	Hardened steel > 55 HRC			55 – 59 HRC	–
		H4.2				> 59 HRC	–

Notes

DORMER PRAMET™

Certainty at every turn

Together we will keep our world turning, now and into the future. We want to help our community feel confident they can get the job done with simplified access to the right advice, tools and training whenever and wherever they need it. Delivering certainty to help our customers achieve their goals today – and be ready for tomorrow.

Need some help?
Contact sales support.

Download our apps

Library app

Calculator app

Certainty at every turn™